PUBLISHED: 21-NOV-2016
2017.0 DISCOVERY (LR), 307-01

AUTOMATIC TRANSMISSION /TRANSAXLE - VEHICLES WITH: 8HP45 8-SPEED AUTOMATIC TRANSMISSION AWD

DESCRIPTION AND OPERATION

COMPONENT LOCATION

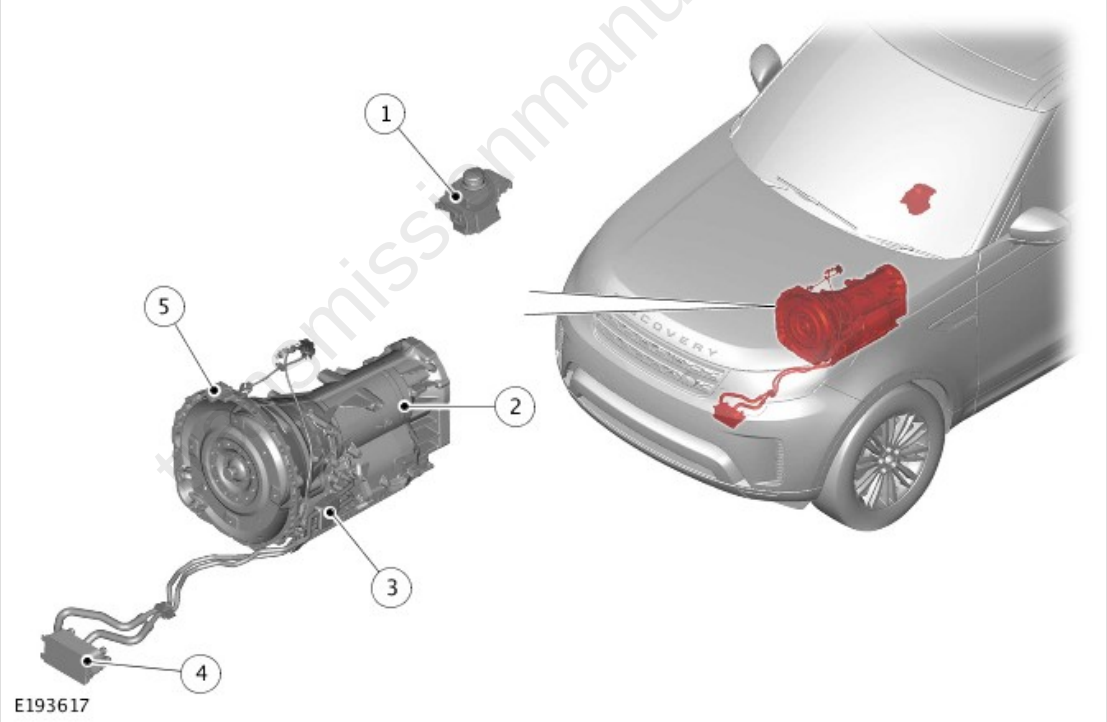

ITEM	DESCRIPTION
1	Transmission Control Switch (TCS)
2	Automatic Transmission (AT)
3	Thermostatic valve
4	Automatic Transmission Fluid (ATF) cooler

5	Emergency Park Release (EPR) lever

OVERVIEW

The ZF 8HP45 transmission is an electronically controlled, hydraulically operated, eight speed automatic unit. The hydraulic and electronic control elements of the transmission, including the Transmission Control Module (TCM), are incorporated in a single unit located inside the transmission and is known as 'Mechatronic'.

The ZF 8HP45 transmission has the following features:

- Designed to be maintenance free.
- Automatic Transmission Fluid (ATF) is 'fill for life'.
- The torque converter features a controlled slip feature with electronically regulated control of lock-up, creating a smooth transition to the fully locked condition.
- Shift programs controlled by the Transmission Control Module (TCM).
- Adaptive Shift Strategy (ASIS), to provide continuous adaptation of shift changes to suit the driving style of the driver, which can vary from sporting to economical.
- Connected to the Powertrain Control Module (PCM) via FlexRay bus for communications.
- Default mode if major faults occur.
- Diagnostics available from the TCM via the FlexRay bus systems.

The transmission selections are made using the Transmission Control Switch (TCS) in the floor console.
For additional information, refer to: External Controls - Vehicles With: 8HP45 8-Speed Automatic Transmission AWD (307-05B, Description and Operation).

transmissionmanuals.com

DESCRIPTION

AUTOMATIC TRANSMISSION

The Automatic Transmission (AT) comprises the main casing which houses all of the transmission components. The main casing also incorporates an integral torque converter housing.

A fluid pan is attached to the lower face of the main casing and is secured with bolts. The fluid pan is sealed to the main casing with a gasket. Removal of the fluid pan allows access to the Mechatronic valve block. The fluid pan has magnets located at the rear which collects any ferrous metallic particles present in the Automatic Transmission Fluid (ATF).

A fluid filter is located inside the fluid pan. If the ATF becomes contaminated or after any service work, the fluid pan with integral filter must be replaced.

The transmission does not have mechanical connection for park lock operation from the passenger compartment. This is initiated electronically when the Transmission Control Switch (TCS) is moved to the Park (P) position. An EPR mechanism is provided to release the park interlock if a failure occurs.

A new feature of the eight speed transmission is decoupling of the transmission when the vehicle is at a standstill. Normally the transmission remains in gear with the torque converter slipping and the vehicle is prevented from moving by applying the brake. The new system disengages one of the transmission clutches and only a minimum rotating load remains. This has the effect of further reducing fuel consumption.

The ATF pump is driven by a simplex chain and two drive gears from the input shaft. The ATF pump is a double stroke vane cell pump which delivers 50 cm^3 of ATF per revolution.

The integral torque converter housing provides protection for the torque converter assembly and also provides the attachment for the transmission to the engine. The torque converter is a non-serviceable assembly which also contains the lock-up clutch mechanism.

The main casing contains the following major components:

- Input shaft
- Output shaft
- Mechatronic valve block which contains the solenoids, speed sensors and the Transmission Control Module (TCM)
- Three rotating multiplate drive clutches
- Two fixed multiplate brake clutches
- Four planetary gear trains.

Transmission Sectional View

transmissionmanuals.com

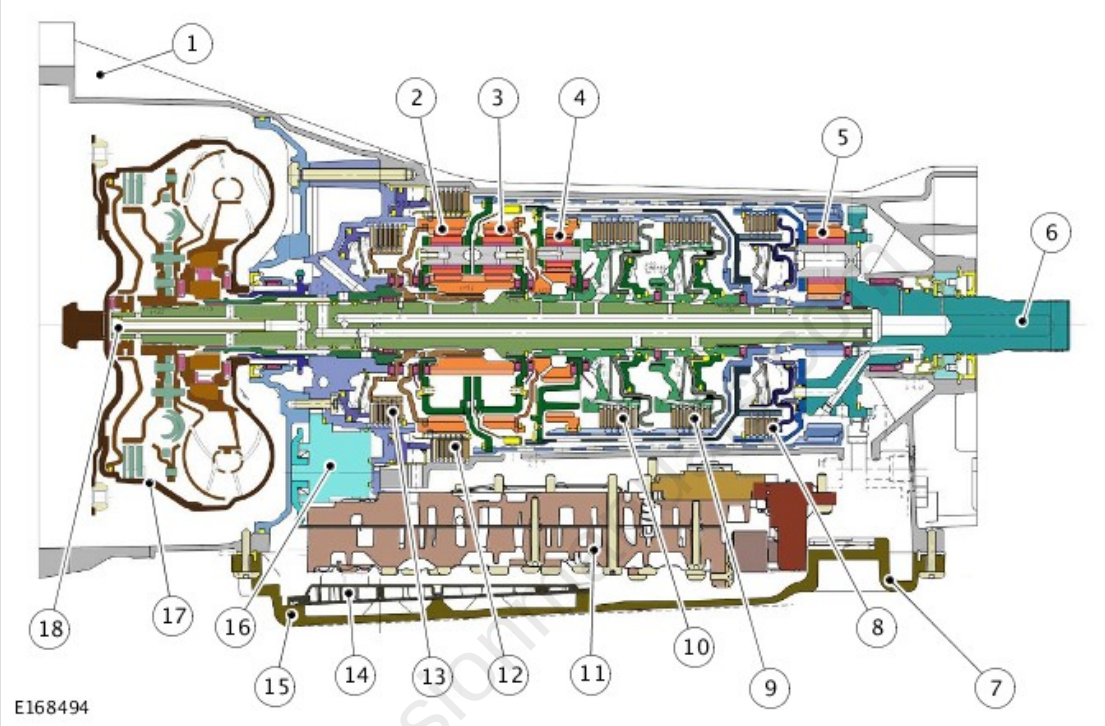

ITEM	DESCRIPTION
1	Transmission casing
2	Gear set 1
3	Gear set 2
4	Gear set 3
5	Gear set 4
6	Output shaft
7	Drain plug
8	Clutch D
9	Clutch C
10	Clutch E
11	Mechatronic valve block
12	Brake B

13	Brake A
14	Fluid filter
15	Fluid pan
16	Automatic Transmission Fluid (ATF) pump
17	Torque converter
18	Input shaft

TORQUE CONVERTER

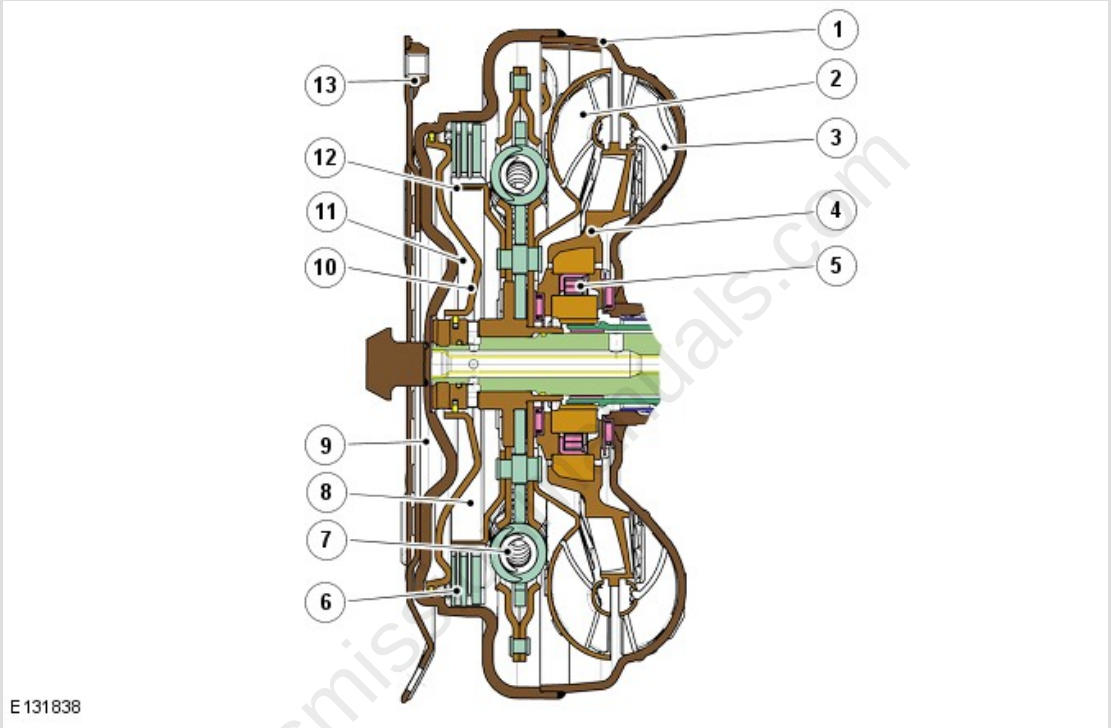

ITEM	DESCRIPTION
1	Converter cover
2	Turbine
3	Impeller
4	Stator
5	Stator freewheel
6	Lined plate of lock-up clutch
7	Torsional vibration damper
8	Pipe 1 and 2
9	Pipe 3
10	Lock-up clutch piston

11	Space behind lock-up clutch
12	Disc carrier
13	Drive plate/disc carrier

The torque converter is the coupling element between the engine and the transmission and is located in the torque converter housing, on the engine side of the transmission. The driven power from the engine crankshaft is transmitted hydraulically and mechanically through the torque converter to the transmission. The torque converter is connected to the engine by a drive plate attached to the rear of the crankshaft.

The torque converter comprises an impeller, a stator and a turbine. The torque converter is a sealed unit with all components located between the converter housing cover and the impeller. The two components are welded together to form a sealed, fluid filled housing. With the impeller brazed to the converter housing cover, the impeller is therefore driven at engine crankshaft speed.

The converter housing drive plate has four threaded bosses, which provide for attachment of the engine drive plate. The threaded bosses also provide for location of special tools which are required to remove the torque converter from the torque converter housing.

IMPELLER

Fluid Flow

NOTE:

The following illustration shows a typical turbine, stator and impeller.

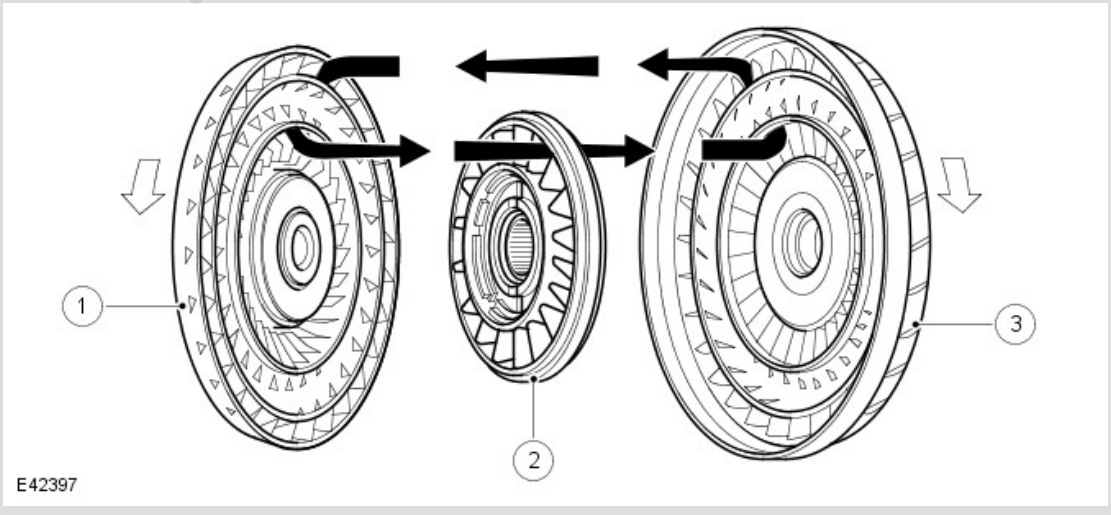

ITEM	DESCRIPTION

transmissionmanuals.com

1	Turbine
2	Stator
3	Impeller

When the engine is running the rotating impeller acts as a centrifugal pump. The impeller picks up the Automatic Transmission Fluid (ATF) at its center and discharges it at high velocity through the blades on its outer rim. Due to the design and shape of the blades and the curve of the impeller body, the ATF rotates in a clockwise direction as it leaves the impeller. This rotation improves the efficiency of the fluid as it contacts the outer row of blades on the turbine.

The centrifugal force of the ATF leaving the blades of the impeller is passed to the curved inner surface of the turbine via the tip of the blades. The velocity and clockwise rotation of the ATF causes the turbine to rotate.

TURBINE

The turbine is similar in design to the impeller with a continuous row of blades. Fluid from the impeller enters the turbine through the tip of the blades. The fluid is directed then around the curved body of the turbine to the root of the blades. The curved surface redirects the fluid back in the opposite direction to which it entered the turbine, applying a turning force to the turbine from the impeller.

The fluid leaving the inner row of the turbine blades is rotated in a counter-clockwise direction due to the curve of the turbine and the shape of the blades. The fluid is now flowing in the opposite direction to the engine rotation and therefore the impeller. If the fluid was allowed to hit the impeller in this condition, it would have the effect of applying a brake to the impeller. To prevent this, the stator is located between the impeller and the turbine.

transmissionmanuals.com

STATOR

The stator is located on the splined transmission stator shaft via a freewheel clutch. The stator comprises a number of blades which are aligned in an opposite direction to those of the impeller and turbine. The main function of the stator is to redirect the returning fluid from the turbine, changing its direction to that of the impeller.

The redirected fluid from the stator is directed at the inner row of blades of the impeller, assisting the engine in turning the impeller. This sequence increases the force of the fluid emitted from the impeller and thereby produces the torque multiplication effect of the torque converter.

Stator Functions

NOTE:

The following illustration shows a typical stator.

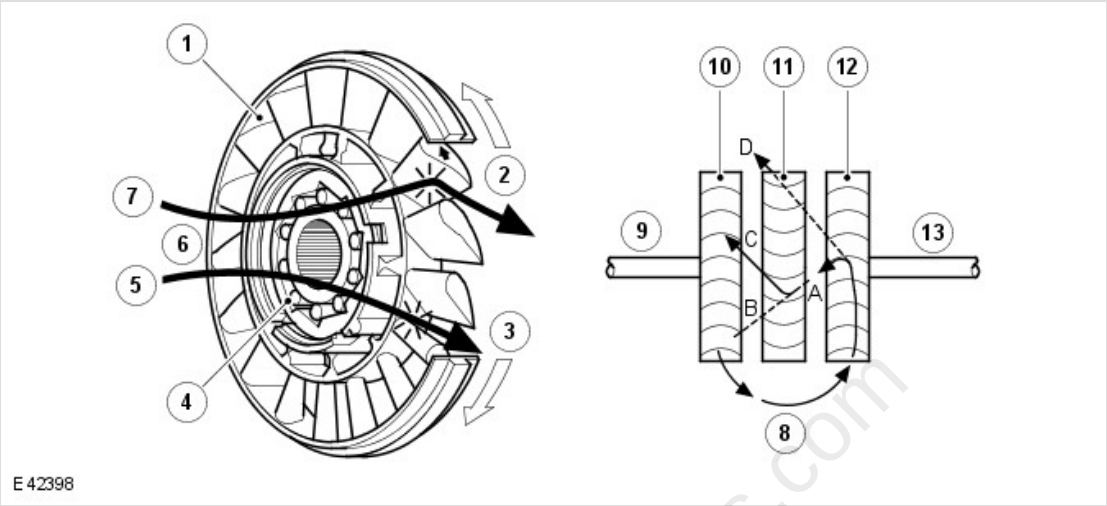

ITEM	DESCRIPTION
1	Blades
2	Stator held – fluid flow redirected
3	Stator rotates freely
4	Roller freewheel
5	Converter at coupling speed
6	Fluid flow from turbine
7	Converter multiplying
8	Fluid flow from impeller
9	Drive from engine
10	Impeller
11	Stator
12	Turbine
13	Output to transmission

Fluid emitted from the impeller acts on the turbine. If the turbine is rotating at a slower speed than the fluid from the impeller, the fluid will be deflected by the turbine blades in the path **'A'** . The fluid is directed at and deflected by the stator blades from path **'B'** to path **'C'** . This provides that the fluid is directed back to the Automatic Transmission

transmissionmanuals.com

Fluid (ATF) pump in the optimum direction. In this condition the roller clutch is engaged and the force of the fluid on the stator blades assists the engine in rotating the impeller.

As the rotational speed of the transmission and therefore the turbine increases, the direction of the fluid leaving the turbine changes to path **'D'** . The fluid is now directed from the turbine to the opposite side of the stator blades, rotating the stator in the opposite direction. To prevent the stator from resisting the smooth flow of the fluid from the turbine, the freewheel clutch releases, allowing the stator to rotate freely on its shaft.

When the stator becomes inactive, the torque converter no longer multiplies the engine torque. When the torque converter reaches this operational condition it ceases to multiply the engine torque and acts solely as a fluid coupling. The stator rotates with the impeller and the turbine at approximately the same speed.

ONE WAY FREEWHEEL CLUTCH

The freewheel clutch can perform two functions: Hold the stator stationary and free wheel allowing the stator to rotate without a drive output. The roller type freewheel clutch comprises an inner and outer race and a roller and cage assembly. The inner and outer races are pressed into their related components with which they rotate. The roller and cage assembly is located between the inner and outer races.

The rollers are located in a cage which is a spring which holds the rollers in the 'wedge' direction. It maintains them in contact with the inner and outer races. The outer race has a series of ramps which allow the rollers to lock the inner and outer races together.

When the outer race is rotated in a clockwise direction, the rollers are 'wedged' between the inner and outer races. The rollers then prevent the rotation of the outer race by holding it to the inner race, which is held stationary.

LOCK-UP CLUTCH MECHANISM

The torque converter clutch is hydraulically controlled by an Electronic Pressure Regulating Solenoid (EPRS), which is controlled by the Transmission Control Module (TCM).

This allows the torque converter to have three states of operation as follows:

- Fully engaged
- Controlled slip variable engagement
- Fully disengaged.

The torque converter pressure valve reduces system pressure and guarantees the pressure needed for the torque converter. It also limits the maximum torque converter pressure to prevent the torque converter from expanding.

transmissionmanuals.com

The solenoid valve is operated by Pulse Width Modulation (PWM) signals from the TCM to give full, partial or no lock-up of the torque converter.

The lock-up clutch is a hydro-mechanical device which eliminates torque converter slip, improving fuel consumption. The engagement and disengagement is controlled by the TCM to allow a certain amount of controlled 'slip'. This allows a small difference in the rotational speeds of the impeller and the turbine which results in improved shift quality. The lock-up clutch comprises a piston and a clutch friction plate.

In the unlocked condition, the oil pressure supplied to the piston chamber is reduced and the pressure in the turbine chamber is allowed to push the piston back. In this condition the clutch plate are released and torque converter slip is permitted.

In the locked condition, the torque converter clutch spool valves are actuated by the EPRS. Pressurized fluid is directed into the lock-up clutch piston. The piston moves with the pressure and pushes the clutch plates together. As the pressure increases, the friction between the clutch plates increases, finally resulting in full lock-up of the clutch plates. In this condition there is direct mechanical drive from the engine crankshaft to the transmission planetary gear train.

The standstill decoupling feature is new for the eight speed transmission. When the vehicle comes to a standstill (with the brakes applied), the converter is disconnected from the driveline, so that only a slight residual load remains. This further reduces fuel consumption. Decoupling is by actuating clutch B in the transmission, and is dependent on load and output speed.

transmissionmanuals.com

AUTOMATIC TRANSMISSION FLUID PUMP

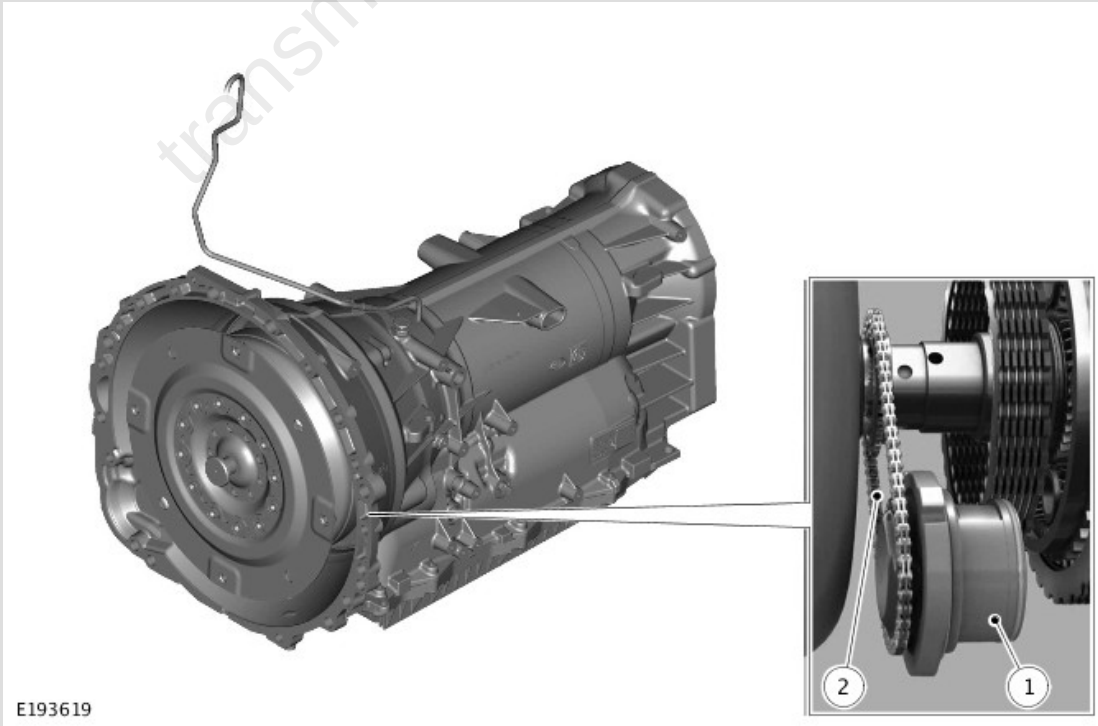

ITEM	DESCRIPTION
1	Vane pump
2	Chain drive from torque converter cover

The Automatic Transmission Fluid Pump (ATF) pump is an integral part of the transmission.

The ZF 8HP45 ATF pump is a double stroke, vane type pump and is located below the transmission input shaft. The pump is driven by a chain drive from a sprocket located on the torque converter. The pump has a delivery rate of 50 cm^3 per revolution. The drive sprocket is driven at engine speed through a splined connection in the torque converter shell.

The ATF pump is used to:

- Supply hydraulic pressure for the operation of the control valves and clutches.
- Pass the fluid through the transmission cooler.
- Lubricate the gears and shafts.

Automatic Transmission Fluid Pump Schematic Diagram

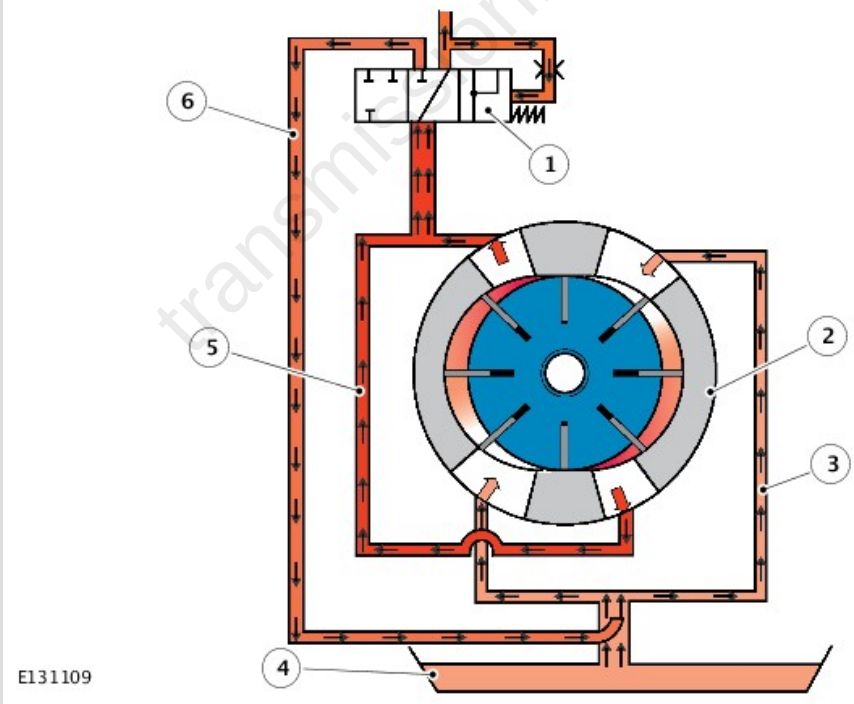

transmissionmanuals.com

ITEM	DESCRIPTION
1	System pressure valve
2	Automatic Transmission Fluid Pump (ATF) pump

3	Intake pipe
4	Oil pan
5	Pressure pipe
6	Recycling of redundant fluid

The Automatic Transmission Fluid Pump (ATF) pump comprises the following components:

- Sprocket
- Rear cover with bearing
- Front cover with bearing
- Cylinder
- Rotor shaft
- Rotor with vanes.

A pressure relief valve is fitted in the pressure outlet gallery from the pump but is not an integral part of the pump itself.

A sprocket is located around the transmission input shaft. Splines on the torque converter nose and the sprocket ensure a positive drive. A simplex chain transmits the rotation of the torque converter cover into rotation of the pump rotor shaft via a second sprocket fitted to the rotor shaft. The gearing of the two sprockets rotates the pump rotor shaft at a speed slightly higher than the torque converter cover rotational speed, which is connected directly to the engine crankshaft.

The ATF pump contains seven vanes which are attached to the rotor and rotate within the cam shaped cylinder. As the vanes rotate, the eccentricity of the central hole in the cylinder causes the space between the vanes to increase. This causes a depression between the vanes and fluid is drawn into the space between the vanes via a suction port connected to the fluid pan. The fluid passes through the fluid pan filter before it is drawn into the ATF pump.

As the rotor shaft rotates further, the inlet port is closed by the vanes which have drawn in fluid, trapping the fluid in the space between the vanes. The eccentric hole in the cylinder causes the space between the vanes to decrease and consequentially compresses and pressurizes the fluid trapped between them.

Further rotation of the rotor shaft moves the vanes towards the outlet port. As the vanes pass the outlet port the pressurized fluid passes from the space between the vanes into the pressure gallery to the pressure relief valve.

transmissionmanuals.com

As the ATF pump is a double stroke vane pump, this sequence is repeated twice per revolution of the rotor shaft.

The pressure relief valve controls the pressure and flow of fluid delivered to the transmission valve block, torque converter and other components. Pressure is controlled by a relief valve which limits the maximum system pressure to 32 bar (464 lbf/in²). The pressure control maintains a constant pressure of fluid irrespective of torque converter input shaft rotational speed. A metering orifice is subject to the pump output pressure. If the pressure in the orifice reaches a predetermined level, a spring loaded ball in the flow control valve is lifted from its seat and pressurized fluid is allowed to recirculate through the pump.

MECHATRONIC VALVE BLOCK

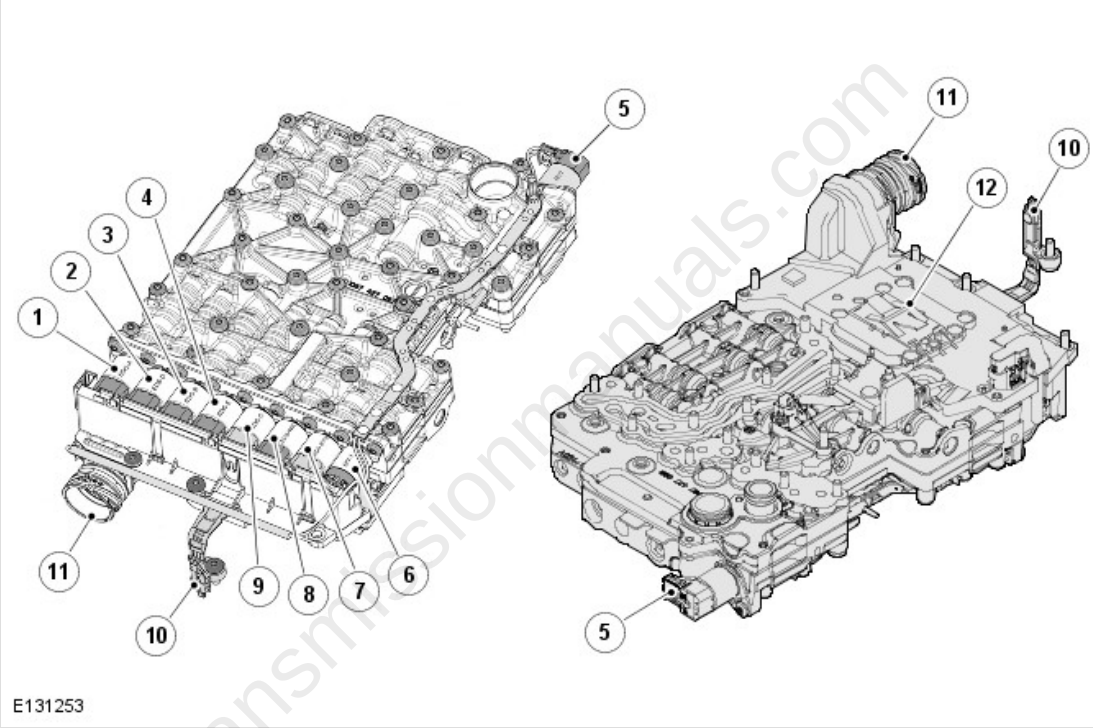

transmissionmanuals.com

ITEM	DESCRIPTION
1	Electronic Pressure Regulating Solenoid (EPRS) A - A brake valve
2	Electronic Pressure Regulating Solenoid (EPRS) D - D clutch valve
3	Electronic Pressure Regulating Solenoid (EPRS) B - B brake valve
4	Electronic Pressure Regulating Solenoid (EPRS) E - E clutch valve
5	Magnet valve 2 - For electrical park interlock (hold out of park)
6	Magnet valve 1 - Pressure reducing valve
7	Electronic Pressure Regulating Solenoid (EPRS) SYS - system pressure valve
8	Electronic Pressure Regulating Solenoid (EPRS) WK - Torque converter lock-up clutch valve
9	Electronic Pressure Regulating Solenoid (EPRS) C - C clutch valve

10	Transmission output shaft speed sensor
11	Electrical connector
12	Transmission Control Module (TCM) - hidden

The mechatronic valve block is located in the bottom of the transmission and is covered by the fluid pan. The valve block houses the Transmission Control Module (TCM), electrical actuators, speed sensors and control valves which provide all electro-hydraulic control for all transmission functions.

The mechatronic valve block comprises the following components:

- Transmission Control Module (TCM)
- Seven pressure regulator solenoids
- Two park lock solenoids
- 21 hydraulic spool valves
- Temperature sensor
- Turbine speed sensor
- Output shaft speed sensor.

Electronic Pressure Regulator Solenoids

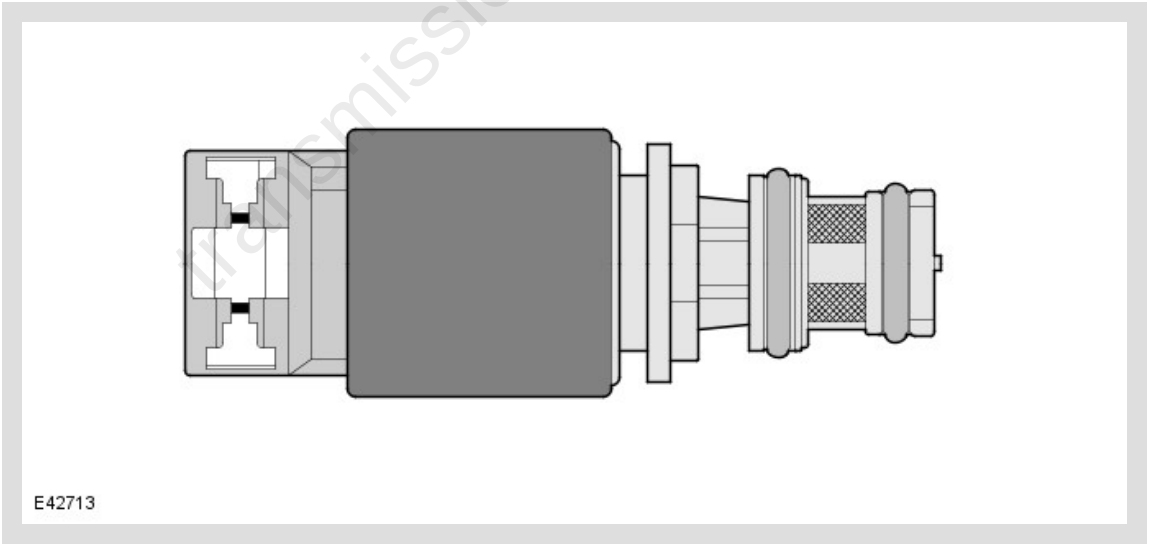

Seven Electronic Pressure Regulator Solenoids (EPRS) are located in the valve block. The solenoids are controlled by Pulse Width Modulation (PWM) signals from the Transmission Control Module (TCM). The solenoids convert the electrical signals into hydraulic control pressure proportional to the signal to actuate the spool valves for precise transmission operation.

Solenoids EPRS A, B, D, E and WK supply a higher control pressure as the signal amperage increases and can be identified by an orange connector cap. The TCM

transmissionmanuals.com

operates the solenoids using PWM signals. The TCM monitors engine load and clutch slip and varies the solenoid duty cycle accordingly. The solenoids have a 12 V operating voltage and a pressure range of 0 - 4.7 bar (0 - 68 lbf.in²).

Solenoids EPRS C and SYS supply a lower control pressure as the signal amperage increases and can be identified by a gray connector cap. The TCM monitors engine load and clutch slip and varies the solenoid duty cycle accordingly. The solenoids have a 12 V operating voltage and a pressure range of 4.7 - 0 bar (68 - 0 lbf.in²).

The resistance of the solenoid coil winding for EPRS solenoids is 5.05 Ohms at 20°C (68°F).

Control Solenoid (MV1)

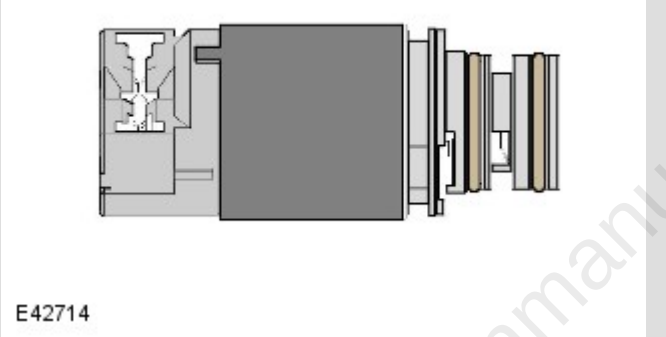

A shift control solenoid Magnetic Valve 1 (MV1) is located in the valve block. The solenoid is controlled by the Transmission Control Module (TCM) and converts electrical signals into hydraulic control signals to control clutch application.

The shift control solenoid is an open/closed, on/off solenoid which is controlled by the TCM switching the solenoid to earth. The TCM also supplies power to the solenoid. The TCM energizes the solenoid in a programmed sequence for clutch application for gear ratio changes and shift control.

The resistance of the solenoid coil winding for solenoid is between 10 to 11 Ohms at 20° C (68°F).

Control Solenoid (MV2)

transmissionmanuals.com

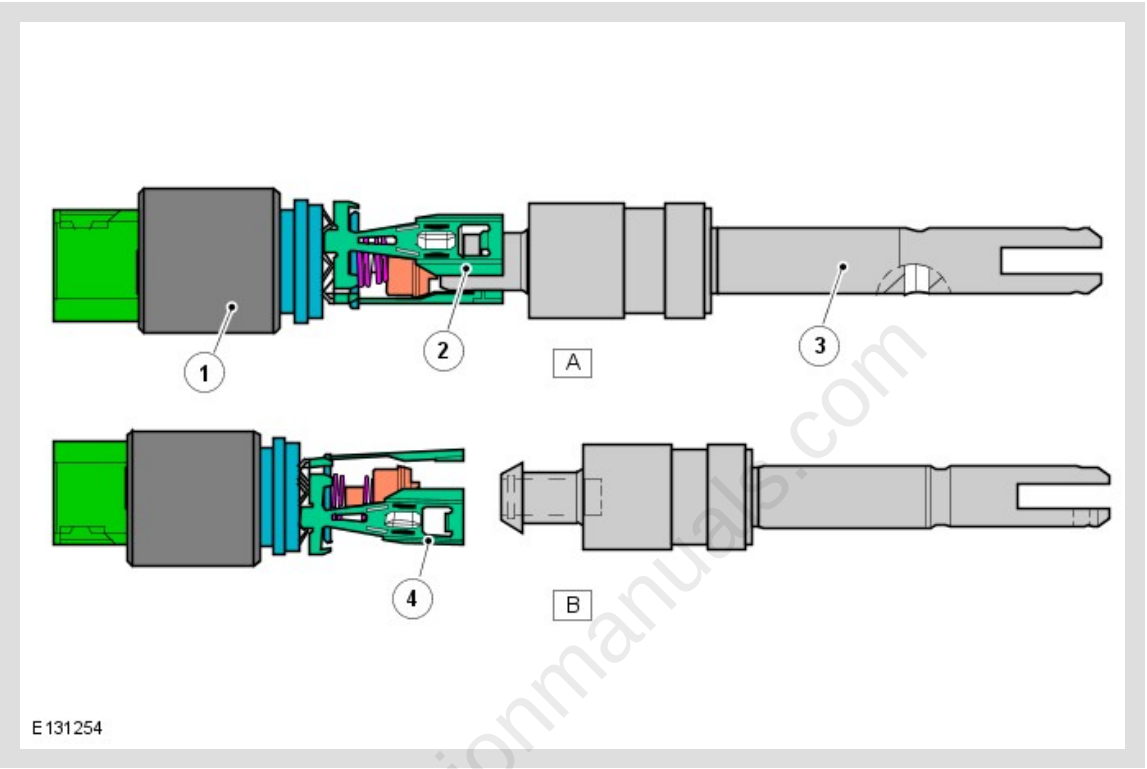

ITEM	DESCRIPTION
A	Solenoid in locked (energized) condition - park lock released
B	Solenoid in unlocked (de-energized) condition - park lock engaged
1	Solenoid
2	Claw - locked
3	Piston
4	Claw - unlocked

A control solenoid Magnetic Valve 2 (MV2) is located in the valve block. The solenoid is controlled by the TCM and converts electrical signals into hydraulic control signals to control the electronic park lock function.

The control solenoid is an on/off solenoid which is controlled by the TCM by switching the solenoid to ground.

transmissionmanuals.com

When the park position is deselected, control solenoid MV2 resets the parking lock valve in the mechatronic valve block. This is achieved by the TCM providing the ground for the solenoid which is energized, releasing the claws from retaining the park lock piston. Main fluid pressure acting on the parking lock piston, pushes the piston back to release the lock.

When the park position is selected, control solenoid MV2 is de-energized. The fluid pressure at the parking lock cylinder piston is vented and the mechanical interlock of the piston is opened. A pre-tensioned torsion spring at the park lock disc pulls the piston into the Park (P) position where the piston engages with the control solenoid claws and is locked in the park position. The Emergency Park Release (EPR) mechanism can be used to release the parking lock manually if an electrical failure occurs.

The resistance of the solenoid coil winding for solenoid is 25 Ohms at 20°C (68°F).

When the Neutral (N) position is selected and the engine is not running, the fluid pressure at the park lock cylinder piston is released. The current supply to the control solenoid MV2 remains. The park lock cylinder piston is still held in the unlocked position by the spring force acting on the park lock disc, preventing the park lock plate from engaging the parking lock. This allows the vehicle to be moved when the engine is not running for a short time. Should the battery voltage fall below the level required to maintain the solenoid in the energized condition, the park lock will be engaged.

transmissionmanuals.com

Speed Sensors

The turbine speed sensor and the output shaft speed sensor are Hall effect type sensors located in the mechatronic valve block and are not serviceable items. The Transmission Control Module (TCM) monitors the signals from each sensor to determine the input (turbine) speed and the output shaft speed.

The turbine speed is monitored by the TCM to calculate the slip of the torque converter clutch and internal clutch slip. This signal allows the TCM to accurately control the slip timing during shifts and adjust clutch application or release pressure for overlap shift control.

The output shaft speed is monitored by the TCM and compared to engine speed signals received on the FlexRay bus from the Powertrain Control Module (PCM). Using a comparison of the two signals the TCM calculates the transmission slip ratio for plausibility and maintains adaptive pressure control.

Temperature Sensor

The temperature sensor is also located in the mechatronic valve block. The TCM uses the temperature sensor signals to determine the temperature of the Automatic Transmission Fluid (ATF). These signals are used by the TCM to control the

transmission operation to promote faster warm-up in cold conditions or to assist with fluid cooling by controlling the transmission operation when high fluid temperatures are experienced. If the sensor fails, the TCM will use a default value and a Diagnostic Trouble Code (DTC) will be stored in the TCM.

Spool Valves

The mechatronic valve block contains spool valves which control various functions of the transmission. The spool valves are of conventional design and are operated by fluid pressure.

Each spool valve is located in its spool bore and held in a default (unpressurized) position by a spring. The spool bore has a number of ports which allow fluid to flow to other valves and clutches to enable transmission operation. Each spool has a piston which is waisted to allow fluid to be diverted into the applicable ports when the valve is operated.

When fluid pressure moves a spool, one or more ports in the spool bore are covered or uncovered. Fluid is prevented from flowing or is allowed to flow around the applicable waisted area of the spool and into another uncovered port. The fluid is either passed through galleries to actuate another spool, operate a clutch or is returned to the fluid pan.

HYDRAULIC IMPULSE STORAGE (IF EQUIPPED)

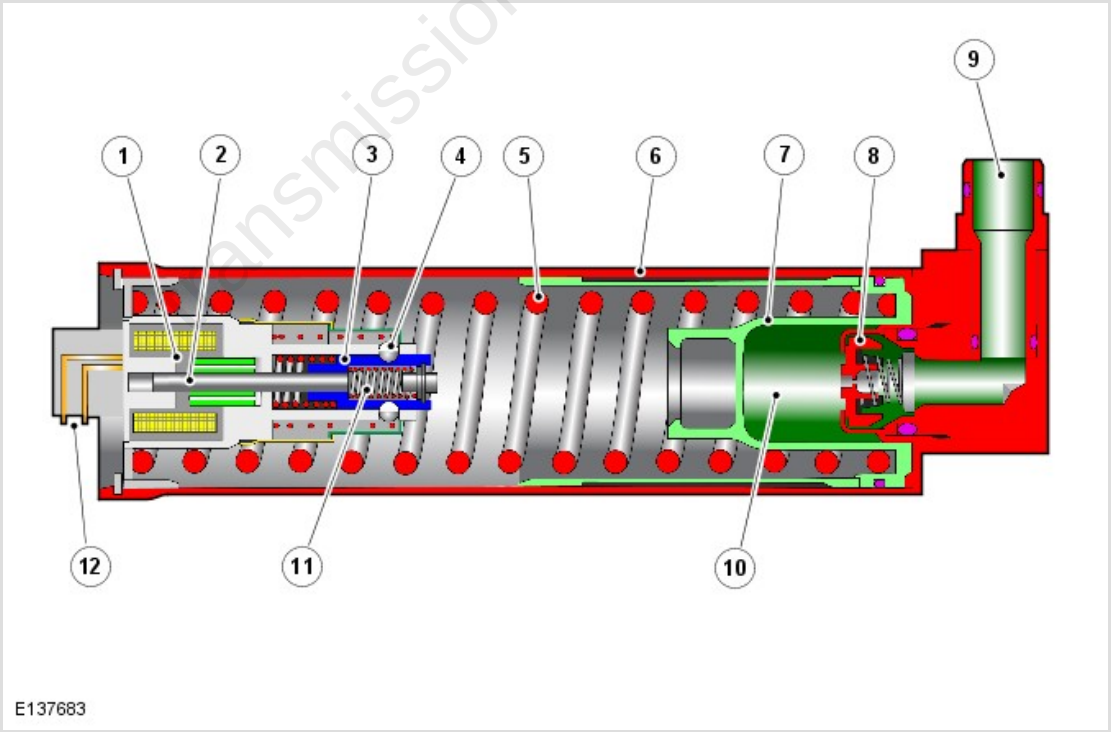

ITEM	DESCRIPTION
1	Solenoid

2	Magnetic core
3	Keeper
4	Balls
5	Piston spring
6	Accumulator cylinder
7	Piston
8	One-way restrictor
9	Inlet/outlet port
10	Piston Automatic Transmission Fluid (ATF) volume
11	Keeper spring
12	Electrical connector

The Hydraulic Impulse Storage (HIS) system if fitted to vehicles with the auto Stop /start system.

The HIS system comprises a cylindrical accumulator which contains an electro-mechanical locking unit, a spring actuated piston and a one-way restrictor. The accumulator is located at the rear of the Mechatronic valve block and is secured in position with three screws and sealed into a port in the transmission casing with an O-ring seal.

The electro-mechanical locking unit comprises a low-current solenoid, a spring loaded keeper incorporating a magnetic core and a number of balls. The keeper has a detent into which the balls locate during filling of the HIS when the engine is running and the Automatic Transmission Fluid (ATF) pump is producing pressure.

The one-way restrictor is located in the inlet/outlet port of the accumulator. The restrictor provides a controlled charging of the HIS, to allow a small volume flow of ATF. This ensures that the operation of the transmission shift elements are not compromised by a sudden drop in ATF pressure. The restrictor allows a charging time for the HIS of approximately 5 seconds. When discharge is required, the restrictor allows full flow from the cylinder.

The filling process for the HIS has several steps:

- When the engine is running and the ATF pump is producing pressure, the one-way restrictor allows a controlled flow of ATF which acts on the piston.
- The ATF pressure moves the piston into the accumulator cylinder. A locking ring on the piston passes over the balls which are at this point located in the keeper detent.

transmissionmanuals.com

- As the piston continues to move, a spring in the center of the keeper moves the locking cylinder and the magnetic core towards the solenoid windings and into the final fully charged position. The energized solenoid holds the magnetic core and the balls are lifted from the detent by the movement of the keeper, locking the piston in the charged position. The HIS is now electro-mechanically locked and ready for an engine stop to occur.
- When the engine is stopped, the ATF pump also stops and ATF pressure is decayed. The pressure acting on the piston is also decayed and the piston moves to be held in the locked position by the balls. The energy required for hydraulic filling during engine start is now stored in the tensioned piston spring. The solenoid remains energized to hold the keeper in position and the balls out of the detent to lock the piston.

Charging

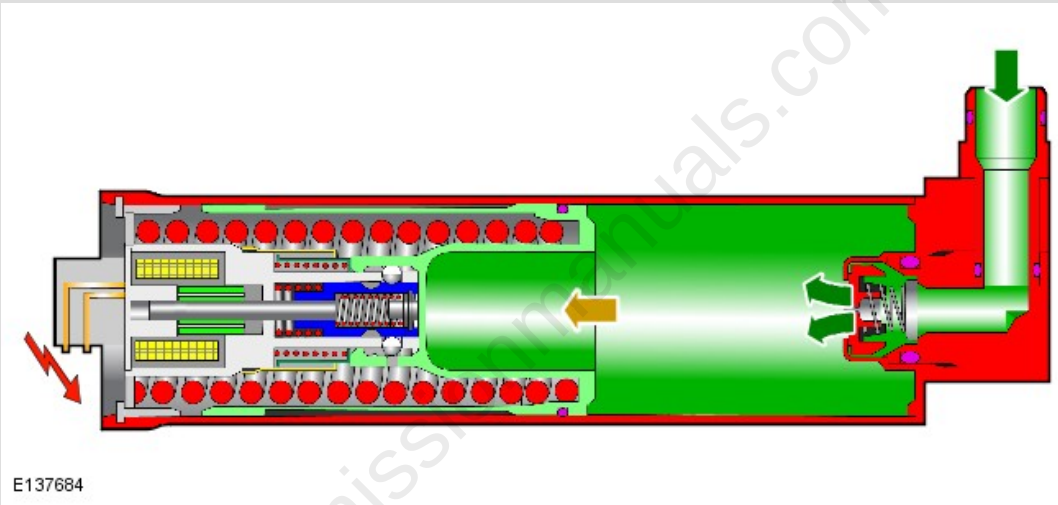

Charged

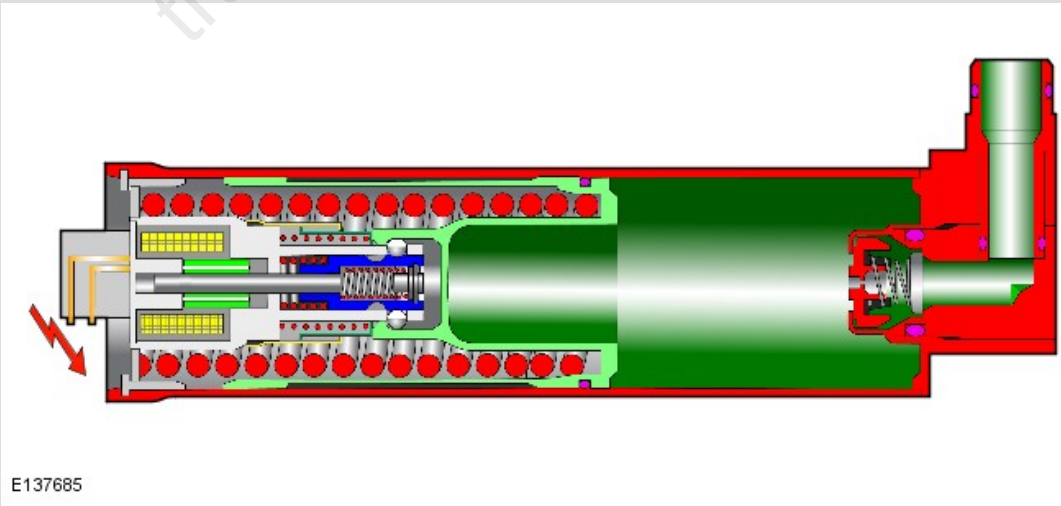

Engine start process:

- When the engine is restarted, the solenoid holding current is removed, which starts the unlocking process.
- The magnetic core is released and the keeper is moved towards the piston under spring pressure. The balls fall into the detent in the keeper, releasing the piston.
- The piston is moved under spring pressure, pushing out the volume of ATF. The one-way restrictor opens fully to allow unrestricted flow of ATF from the accumulator cylinder into the transmission housing. The process is completed between 300 and 350 ms.
- Once the engine is started, the ATF pump produces flow and pressure to provide seamless transmission shift element engagement as soon as the engine is started.

Discharging

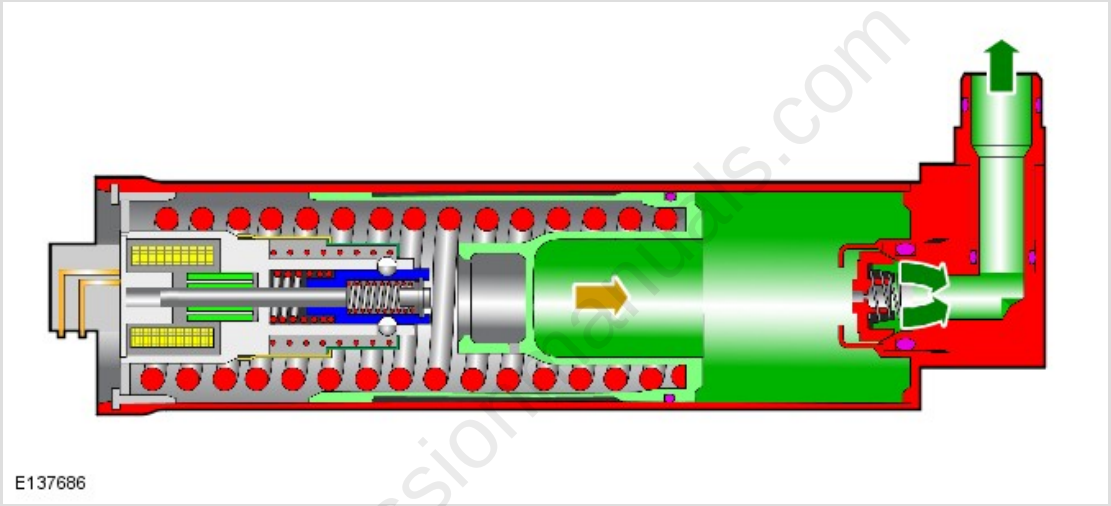

transmissionmanuals.com

DRIVE CLUTCHES/BRAKES

NOTE:

The following illustration shows a typical multiplate clutch/brake.

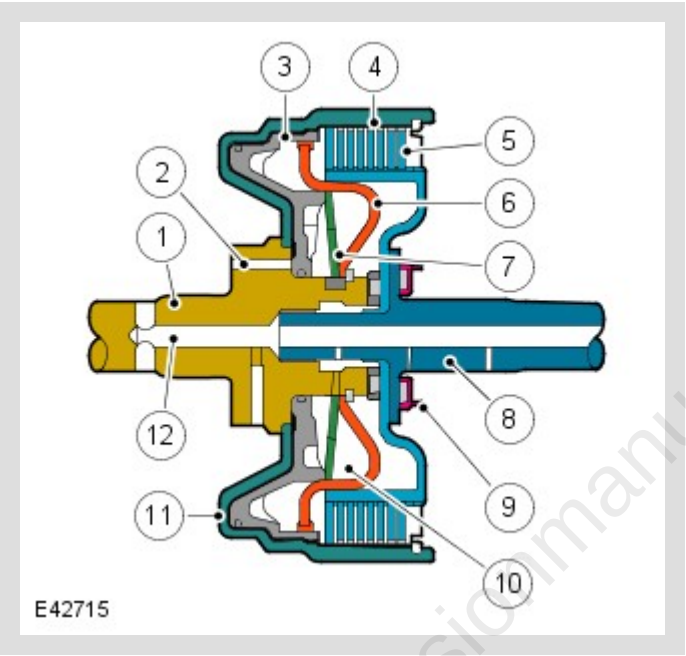

ITEM	DESCRIPTION
1	Input shaft
2	Main pressure supply port
3	Piston
4	Cylinder - external plate carrier
5	Clutch plate assembly
6	Baffle plate (for clutch, not brake)
7	Diaphragm spring
8	Output shaft
9	Bearing
10	Dynamic pressure equalization chamber
11	Piston chamber
12	Lubrication channel

transmissionmanuals.com

There are three drive clutches and two brakes used in the transmission. Each clutch comprises a number of friction plates dependent on the output controlled. A typical clutch consists of a number of alternating steel plates and plates with friction material bonded to each face.

The clutch plates are held apart mechanically by a diaphragm spring and hydraulically by dynamic pressure. The pressure is derived from a lubrication channel which supplies fluid to the bearings and clutch cooling. The fluid is passed via a drilling in the input shaft into the chamber between the baffle plate and the piston. To prevent inadvertent clutch application due to pressure build up produced by centrifugal force, the fluid in the dynamic pressure equalization chamber overcomes any centrifugal pressure in the piston chamber. This holds the piston off the clutch plate assembly.

When clutch application is required, main pressure from the Automatic Transmission Fluid (ATF) pump is applied to the piston chamber from the supply port. This main pressure overcomes the low pressure fluid present in the dynamic pressure equalization chamber. The piston moves, against the pressure applied by the diaphragm spring, and compresses the clutch plate assembly. When the main pressure falls, the diaphragm spring pushes the piston away from the clutch plate assembly, disengaging the clutch.

transmissionmanuals.com

PLANETARY GEAR TRAINS

The eight forward gears and the reverse gear are produced by a combination of four simple planetary gear sets, three clutches and two brakes. The front two gear sets share a common sun gear. Power is output always through the planetary carrier of the fourth gearset.

Five shift elements, comprising three clutches and two brakes, are responsible for all eight forward gears and the reverse gear. High efficiency is achieved by the use of only two shift elements disengaged in each gear which reduces drag and so increases the efficiency.

Planetary Gear Sets 1, 2 And 3

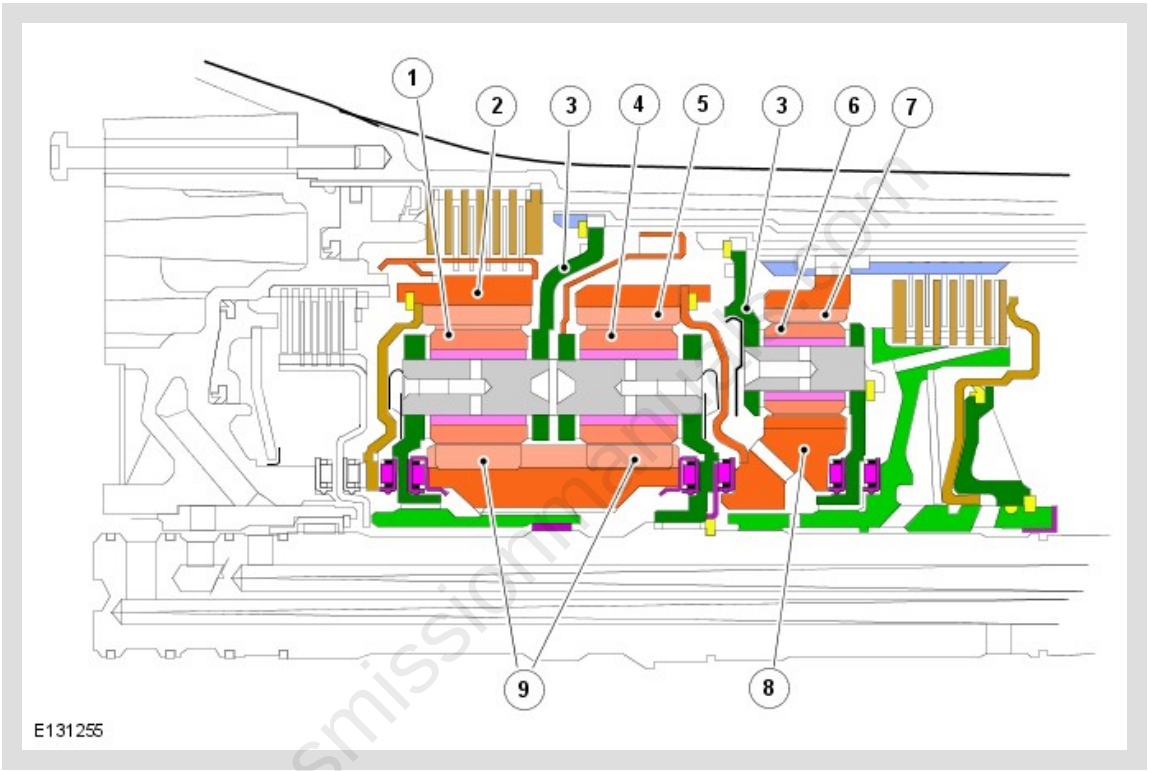

ITEM	DESCRIPTION
1	Planetary gears - Gear set 1
2	Ring gear - Gear set 1
3	Planetary gear carrier (spider)
4	Planetary gears - Gear set 2
5	Ring gear - Gear set 2
6	Planetary gears - Gear set 3
7	Ring gear - Gear set 3
8	Sun wheel - Gear set 3
9	Sun wheel - Joint gear sets 1 and 2

The planetary gear sets 1 and 2 comprise:

- Sun gear - shared by both gear sets
- Four planetary gears per gear set
- Planetary gear carrier (spider) per gear set
- Ring gear per gear set.

The planetary gear set 3 comprises:

- Sun gear
- Three planetary gears
- Planetary gear carrier (spider)
- Ring gear.

Planetary Gear Set 4

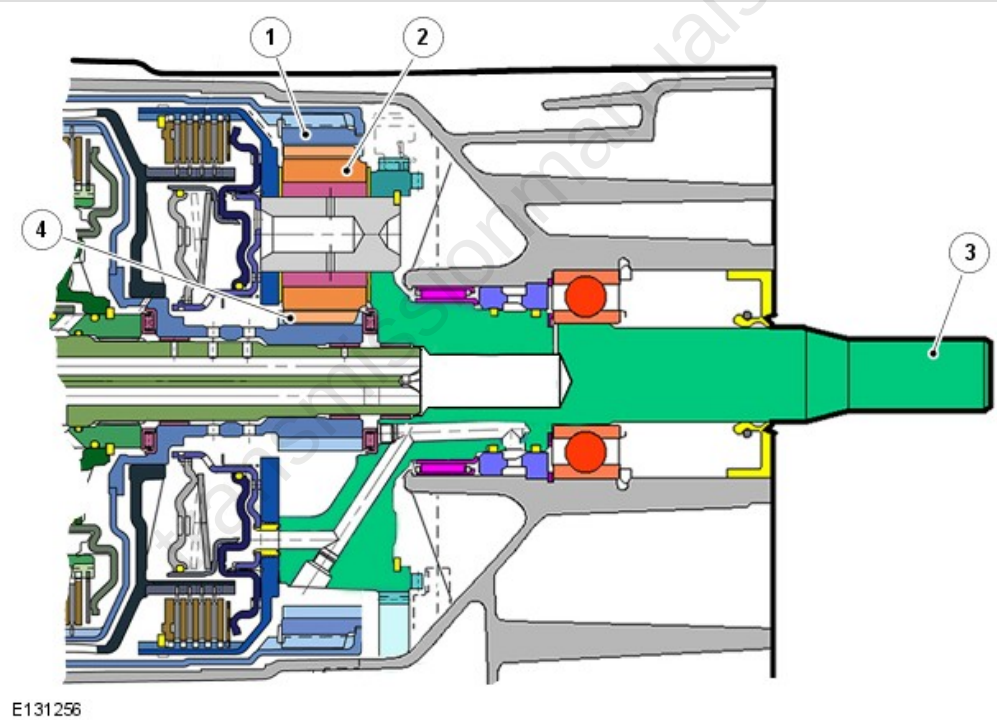

ITEM	DESCRIPTION
1	Ring gear
2	Planetary gears
3	Output shaft / gear carrier
4	Sun gear

The planetary gear set 4 comprises:

- Sun gear
- Four planetary gears
- Planetary gear carrier (spider) - output shaft
- Ring gear.

TRANSMISSION CONTROL MODULE

The Transmission Control Module (TCM) is an integral part of the mechatronic valve block which is located at the bottom of the transmission, within the fluid pan. The TCM is the main controlling component of the transmission.

The TCM processes signals from the transmission speed and temperature sensors, Powertrain Control Module (PCM) and other vehicle systems. From the received signal inputs and pre-programmed data, the module calculates the correct gear, torque converter clutch setting and optimum pressure settings for gear shift and lock-up clutch control.

OPERATION

POWER FLOWS

Operation of the transmission is controlled by the Transmission Control Module (TCM), which electrically activates various solenoids to control the transmission gear selection. The sequence of solenoid activation is based on programmed information in the TCM memory and physical transmission operating conditions such as:

- Vehicle speed
- Throttle position
- Engine load
- Selector lever position.

All gear shifts from 1st to 8th and 8th to 1st are known as 'overlap' shifts. Overlap shifts are during a gear shift one clutch must remain capable of transmitting torque at a reduced main pressure until the other clutch is ready to accept the torque.

Schematic Diagram - Power Flow

transmissionmanuals.com

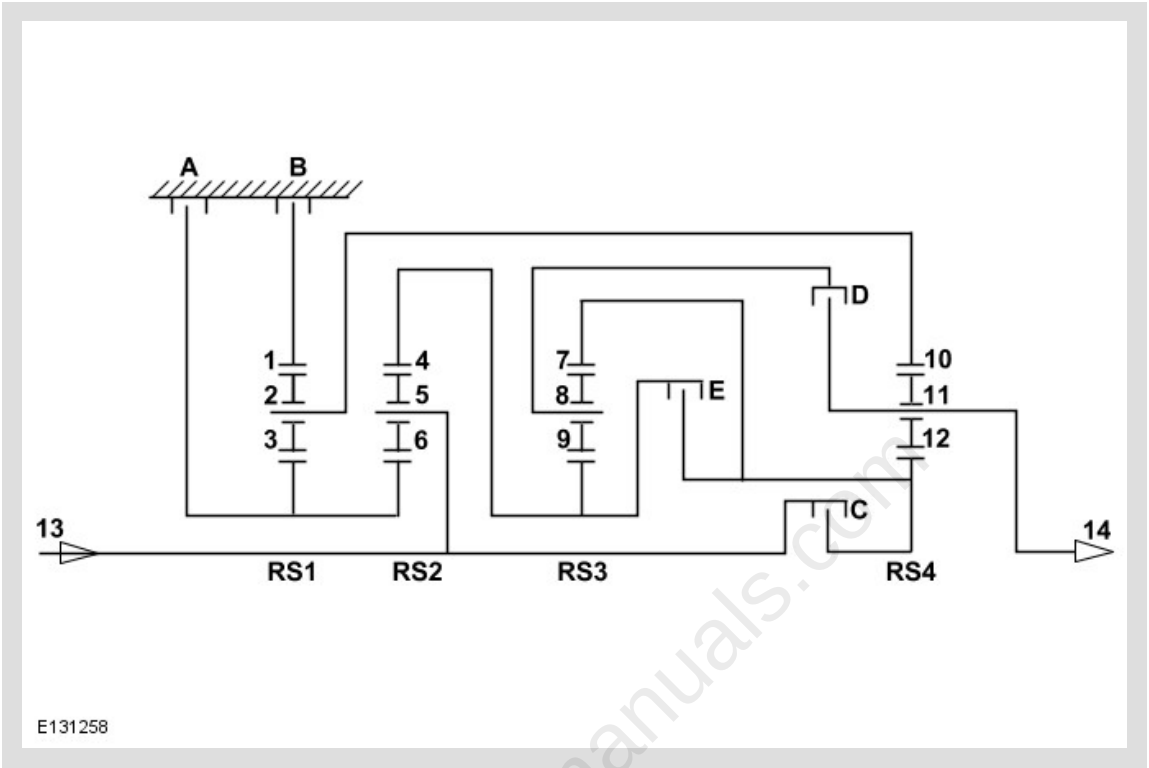

ITEM	DESCRIPTION
A	Multiplate brake
B	Multiplate brake
C	Multiplate clutch
D	Multiplate clutch
E	Multiplate clutch
1	Ring gear of planetary gear set 1
2	Planetary gears of planetary gear set 1
3	Sun gear of planetary gear set 1
4	Ring gear of planetary gear set 2
5	Planetary gears of planetary gear set 2
6	Sun gear of planetary gear set 2
7	Ring gear of planetary gear set 3
8	Planetary gears of planetary gear set 3
9	Sun gear of planetary gear set 3

transmissionmanuals.com

10	Ring gear of planetary gear set 4
11	Planetary gears of planetary gear set 4
12	Sun gear of planetary gear set 4
13	Power input from torque converter
14	Power output to output shaft

Engine torque is transferred, via operation of single or combinations of clutches to the four planetary gear trains. All gear trains are controlled by reactionary inputs from brake clutches to produce the eight forward gears and the reverse gear.

The ratios are as follows:

GEAR	1ST	2ND	3RD	4TH	5TH	6TH	7TH	8TH	REVERSE
Ratio	4.714	3.143	2.106	1.667	1.285	1.000	0.839	0.667	-3.295

SHIFT ELEMENTS

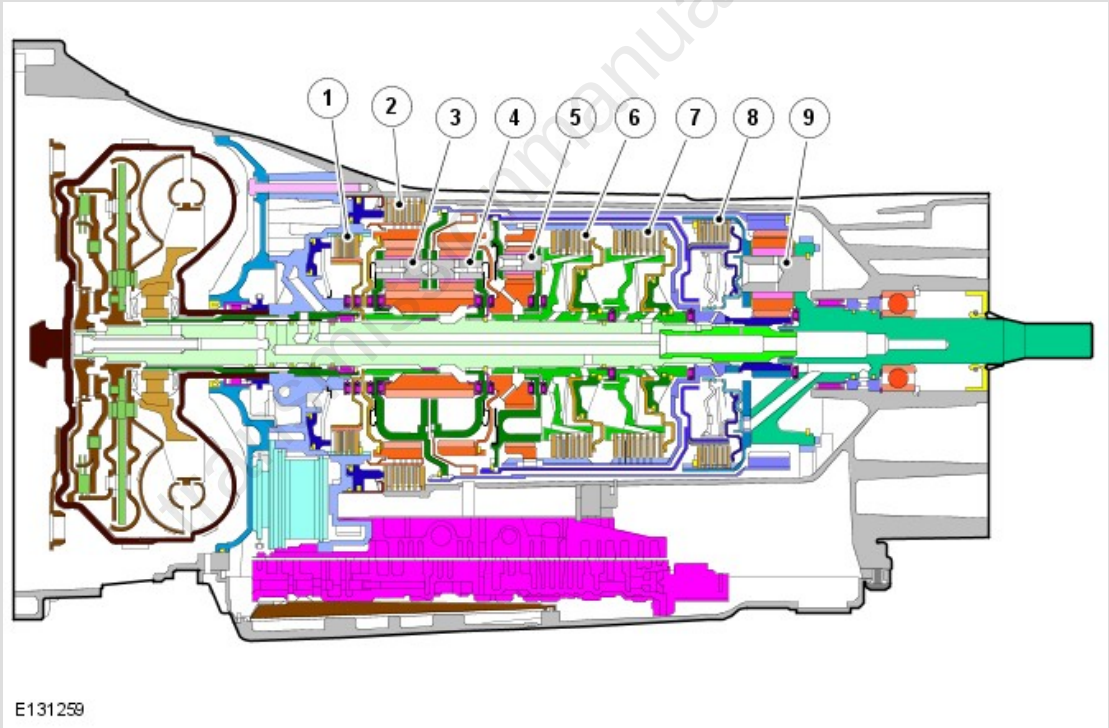

ITEM	DESCRIPTION
1	Brake A
2	Brake B
3	Gear set 1
4	Gear set 2
5	Gear set 3

6	Clutch E
7	Clutch C
8	Clutch D
9	Gear set 4

The shift elements, clutches and brakes are actuated hydraulically. Fluid pressure is applied to the required clutch and/or brake, pressing the plates together and allowing drive to be transmitted through the plates. The purpose of the shift elements is to perform power-on shifts with no interruption to traction and smooth transition between gear ratios.

INSTRUMENT CLUSTER



ITEM	DESCRIPTION
1	Message center
2	Malfunction Indicator Lamp (MIL)
3	Transmission status display

The Thin Film Transistor (TFT) display Instrument Cluster (IC) is connected to the Body Control Module/Gateway Module (BCM/GWM) assembly via the High Speed (HS) Controller Area Network (CAN) chassis systems bus. Transmission status is transmitted by the Transmission Control Module (TCM) via FlexRay bus to the BCM/GWM assembly and displayed to the driver in one of two displays in the IC.

For additional information, refer to: Instrument Cluster (413-01, Description and Operation).

Malfunction Indicator Lamp

The Malfunction Indicator Lamp (MIL) is located in the tachometer of the IC. Transmission related faults which may affect the vehicle emissions will illuminate the MIL.

The MIL is illuminated by the Powertrain Control Module (PCM) on receipt of a relevant fault message from the TCM on the FlexRay bus. The nature of the fault can be diagnosed using Land Rover approved diagnostic equipment which reads the Diagnostic Trouble Codes (DTC) stored in the TCM memory.

Transmission Status Display

The transmission status display is located in the tachometer of the IC. The display shows the selected gear and the Transmission Control Switch (TCS) position when the vehicle is in manual or sport mode.

The following table shows the displays and their descriptions.

SYMBOL	DESCRIPTION
P	Park selected
R	Reverse selected
N	Neutral selected
D *	Drive and temporary manual mode selected (* = current gear)
S *	Sport mode selected (* = current gear)
1	1st gear selected (manual CommandShift mode)
2	2nd gear selected (manual CommandShift mode)
3	3rd gear selected (manual CommandShift mode)
4	4th gear selected (manual CommandShift mode)
5	5th gear selected (manual CommandShift mode)
6	6th gear selected (manual CommandShift mode)
7	7th gear selected (manual CommandShift mode)
8	8th gear selected (manual CommandShift mode)

Message Center

transmissionmanuals.com

The message center is located in the Instrument Cluster (IC) . The message center is a Thin Film Transistor (TFT) display that relays vehicle status and operating information to the driver and can display messages relating to a number of vehicle systems. If a transmission fault occurs, the message 'GEARBOX FAULT' is displayed in the message center.
For additional information, refer to: Instrument Cluster (413-01, Description and Operation).

TRANSMISSION CONTROL MODULE

The Transmission Control Module (TCM) outputs signals to control the shift control solenoid valves and the Electronic Pressure Regulator Solenoids (EPRS) to control the hydraulic operation of the transmission.

The TCM processes signals from the following:

- Transmission speed sensors
- Transmission temperature sensors
- Transmission Control Switch (TCS)
- Powertrain Control Module (PCM)
- Other vehicle systems.

The PCM supplies the engine management data over the FlexRay systems bus. The TCM requires engine data to efficiently control the transmission operation, for example drive plate torque, engine speed, accelerator pedal angle, engine temperature. The steering angle sensor and the Anti-lock Brake System (ABS) control module also supply data to the TCM on the FlexRay systems bus. The TCM uses data from these systems to suspend gear changes when the vehicle is cornering and/or the ABS control module is controlling braking or traction control.

The paddle switches are hardwired to the right steering wheel switchpack. Operation of the paddle switch completes a ground path to the switchpack. The switchpack converts the completed ground signal into a Local Interconnect Network (LIN) bus signal which is passed via the Clockspring (CLKSPG) and the Steering Wheel Module (SWM) to the Body Control Module/Gateway Module (BCM/GWM) assembly. The BCM/GWM converts the signal into a FlexRay bus signal to the Transmission Control Module (TCM).

Using the signal inputs and the pre-programmed data, the TCM control program calculates the correct gear and torque converter lock-up clutch setting. The optimum pressure settings for gear shift and lock-up clutch control are also controlled by the TCM. Special output-side modules (power output stages, current regulator circuits), allow the TCM to control the solenoid valves and pressure regulators and consequently precisely control the hydraulics of the automatic transmission. In addition, the amount and duration of engine interventions are supplied to the engine management by way of the FlexRay systems bus.

transmissionmanuals.com

Engine Stall

If the vehicle stalls it will coast down in gear, with the transmission providing drive to the engine. A restart can be attempted at this point and the engine may start and the driver can continue.

If the coast down speed reduces such that the speed of the engine is less than 400 RPM, the transmission will go to Neutral (N), Drive (D) illumination will flash on the IC. The driver needs to select Neutral (N) or Park (P) and then press the brake pedal to restart the engine.

If the ignition switch is operated when driving, the message 'ENGINE STOP BUTTON PRESSED' is displayed in the message center but there will be no change to the ignition state. If the driver requires to switch off the engine, the ignition switch must be pressed for a second time. The engine will be stopped and will be back driven by the transmission as the vehicle coasts down.

CONTROL DIAGRAM

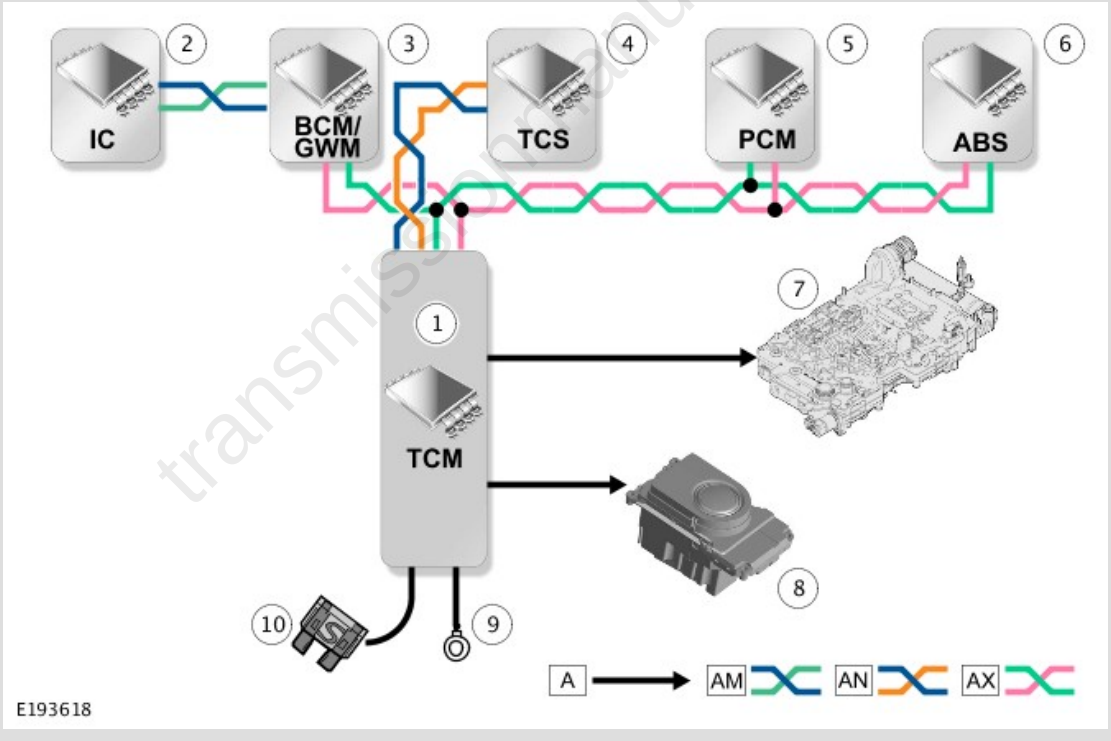

transmissionmanuals.com

A = HARDWIRED; AM = HIGH SPEED (HS) CONTROLLER AREA NETWORK (CAN) CHASSIS SYSTEMS BUS; AN = HIGH SPEED (HS) CONTROLLER AREA NETWORK (CAN) POWERTRAIN SYSTEMS BUS; AX = FLEXRAY BUS.

ITEM	DESCRIPTION
1	Transmission Control Module (TCM)
2	Instrument Cluster (IC)

3	Body Control Module/Gateway Module (BCM/GWM) assembly
4	Transmission Control Switch (TCS)
5	Powertrain Control Module (PCM)
6	Anti-lock Brake System (ABS) control module
7	Mechatronic valve block
8	Transmission Control Switch (TCS)
9	Ground
10	Power supply

transmissionmanuals.com